VEVOR®

TOUGH TOOLS, HALF PRICE

Technical Support and E-Warranty Certificate

www.vevor.com/support

VACUUM PACKING MACHINE
USER MANUAL

Model: DZ-260A-V1, DZ-260A-V2,DZ-260A-V3，
DZ-260S-V1, DZ-260S-V2, DZ-260S-V3

We continue to be committed to provide you tools with competitive price.
"Save Half", "Half Price" or any other similar expressions used by us only represents an estimate of savings you might benefit from buying certain tools with us compared to the major top brands and does not necessarily mean to cover all categories of tools offered by us. You are kindly reminded to verify carefully when you are placing an order with us if you are actually saving half in comparison with the top major brands.

VEVOR®

TOUGH TOOLS, HALF PRICE

VACUUM PACKING MACHINE

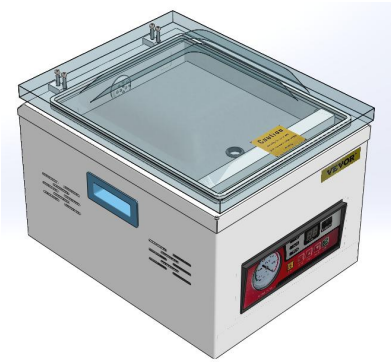

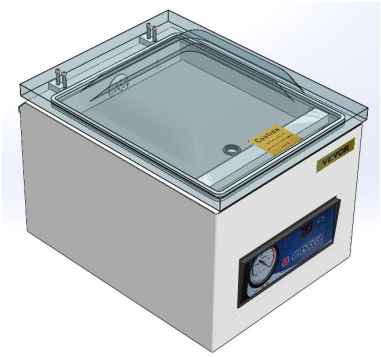

DZ-260A-V1
DZ-260A-V2
DZ-260A-V3

DZ-260S-V1
DZ-260S-V2
DZ-260S-V3

NEED HELP? CONTACT US!

Have product questions? Need technical support? Please feel free to contact us:

Technical Support and E-Warranty Certificate
www.vevor.com/support

This is the original instruction, please read all manual instructions carefully before operating. VEVOR reserves a clear interpretation of our user manual. The appearance of the product shall be subject to the product you received. Please forgive us that we won't inform you again if there are any technology or software updates on our product.

⚠WARNING

1. Read carefully and understand all **ASSEMBLY AND OPERATION INSTRUCTIONS** before operating.
2. Failure to follow the safety rules and other basic safety precautions may result in serious personal injury.

GENERAL SAFETY RULES

Please read the entire operating instructions before using the products for the first time; They contain important information about the correct operation.
The guarantee/warranty will be void if damage is incurred resulting from non-compliance with the operating instructions.Liability for any and all consequential damage is excluded!
We do not assume any liability for damage to property or personal injury caused by improper use or the failure to observe the safety instructions! In such cases the guarantee/warranty will be void

The unauthorized conversion,modification of disassembly of the products is inadmissible because of safety and approval reasons (CE).

The product is not a toy and must be kept out of the reach of children. Particular care must therefore be exercised if children are present.

The product must not get damp or wet,it is only intended for use in dry, indoor locations(not bathrooms or similarly damp areas).There is a risk of a fatal electric shock.

Do not expose the product or its accessories to damp or extremely high or low temperatures.

Do not leave packing materials unattended.They may become dangerous playing material for children.

Dropping,falling,pressure or tensile forces could destroy or at least limit the function of the product.

Never position the device in the vicinity of combustible or easily inflammable materials.
Always make sure that the rotary table on which the object is placed is located in the center of the housing!

This machine uses plastic film or plastic aluminum film as materials to vacuum package paste foods, fruits, sauce vegetables, chemicals, pharmaceuticals, electronic components, precision instruments, rare metals, and other items. Products packaged under vacuum are not easily oxidized or moldy. Especially suitable for industries such as tea, food, and medicine.

If you have reason to assume that safe operation is no longer possible,disconnect the device immediately and secure it against inadvertent operation.

It can be assumed that safe operation is no longer possible if:
- the device shows visible signs of damage,
- the device no longer functions,
- after a longer period of storage under unfavourable conditions,
- following heavy stress during transportation.

SAVE THESE INSTRUCTIONS

MODEL AND PARAMETERS

Model	DZ-260 A-V1	DZ-260 A-V2	DZ-260 A-V3	DZ-260 S-V1	DZ-260 S-V2	DZ-260S -V3
Seal Length	260mm	260mm	260mm	260mm	260mm	260mm
Chamber Dimensions	330×270×50mm			330×270×50mm		
Vacuum Pump Type	Oil Pump	Oil Pump	Oil Pump	Oil Pump	Oil Pump	Oil Pump
Pumping Speed of Vacuum Pump	6.5m³/h	6.5m³/h	6.5m³/h	4.2m³/h	4.2m³/h	4.2m³/h
Voltage	AC 120V 60Hz	AC 230V 50Hz	AC 230V 50Hz	AC 120V 60Hz	AC 230V 50Hz	AC 230V 50Hz
Max. Power	1000W	1000W	1000W	1000W	1000W	1000W
Vacuum Pump Power	180W	180W	180W	120W	120W	120W
Machine Material	201 Stainless Steel			201 Stainless Steel		

STRUCTURE DIAGRAM

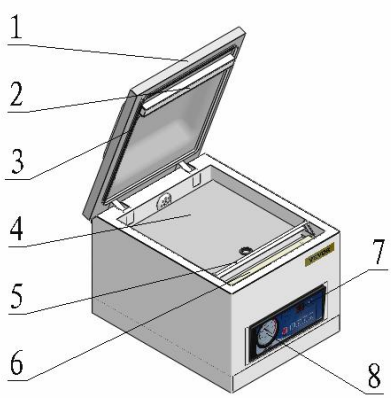

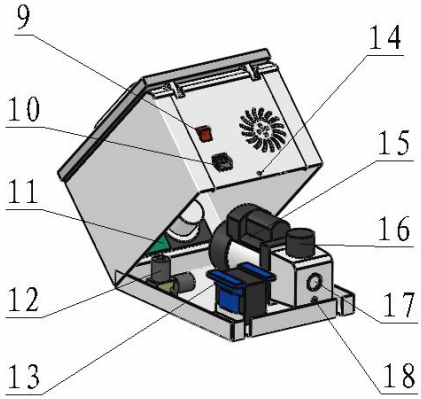

1	Vacuum cover	10	Power plug
2	Silicone strip	11	Circuit board
3	Vacuum sealing bar	12	Vacuum pump solenoid valve
4	Base plate	13	Heating transformer
5	Bag pressing rod	14	Rear cover screw hole
6	Sealing heating strip	15	Vacuum pump
7	Indicator	16	Oil injection port
8	Vacuum gauge	17	Oil level observation window
9	Power switch	18	Oil drain screw

PARTS LIST

Parts \ Model	DZ-260 A-V1	DZ-260 A-V2	DZ-260 A-V3	DZ-260 S-V1	DZ-260 S-V2	DZ-260 S-V3
Heating Wire	×1	×1	×1	×1	×1	×1
Teflon Cloth	×1	×1	×1	×1	×1	×1
Filler Board	×1	×1	×1	×1	×1	×1
Vacuum Pump Oil	×1	×1	×1	×1	×1	×1
Allen Key	×1	×1	×1	×1	×1	×1
Vacuum Bag	×30	×30	×30	×30	×30	×30
Chamber Sealing Strip	×1	×1	×1	×1	×1	×1
Power Cord	×1	×1	×1	×1	×1	×1
Fuse	×2	×2	×2	×2	×2	×2
User Manual	×1	×1	×1	×1	×1	×1

1.

①:Unscrew back cover screw and lift back cover;

②:Take out the oil mist filter;

③:Add vacuum pump oil;

④:Oil level between 1/2-3/4 of the observation hole(do not fill);

⑤:After adding the oil,screw back the oil mist filter, close the back cover.

It is strictly prohibited to start the vacuum pump without oil.

2.PANEL USAGE INSTRUCTIONS

Step 1:Connect the matching power supply

Step 2: Open POWER SWITCH

Step 3：⑥VACUUM :Click the ②SETTING button on the control panel, select the target setting.Click the ③RAISE or ④LOWER button to set the ideal vacuum time. Vacuum time is generally set to 30-40S.

Step 4: ⑦SEALING :Click the ②SETTING button twice, and the sealing time is generally set to 1.5-2S. The sealing time is set according to the thickness of the vacuum bag. It is strictly prohibited to set the sealing time too long or burn out the sealing heating strip.

Step 5: ⑧COOLING:After setting the sealing time, click the ②SETTING button again to set the cooling time, usually 3-5 seconds. After setting the cooling time, click the ②SETTING button and the control panel will display the letter ED , indicating the end of the setting process.

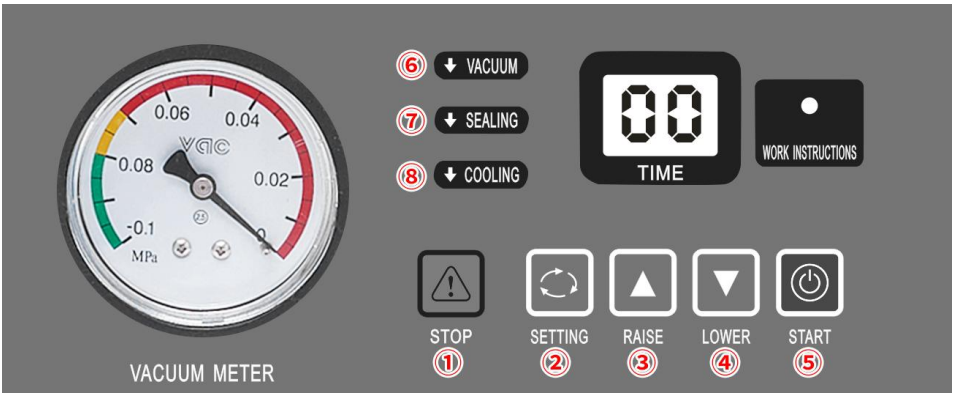

3.When the machine needs to change oil or is not used for a long time, loosen the screw under the oil window and drain the vacuum pump oil. Suggest replacing the vacuum pump oil after the machine has been working continuously for 800 hours.

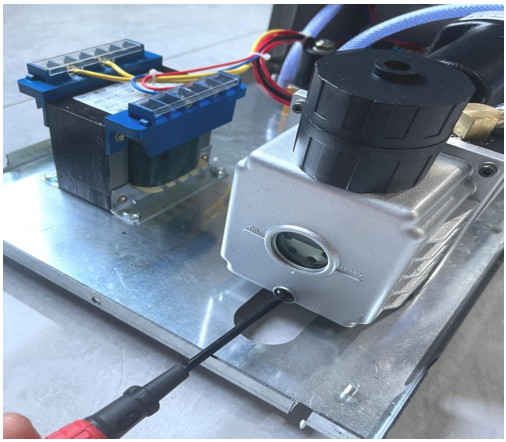

CIRCUIT DIAGRAM

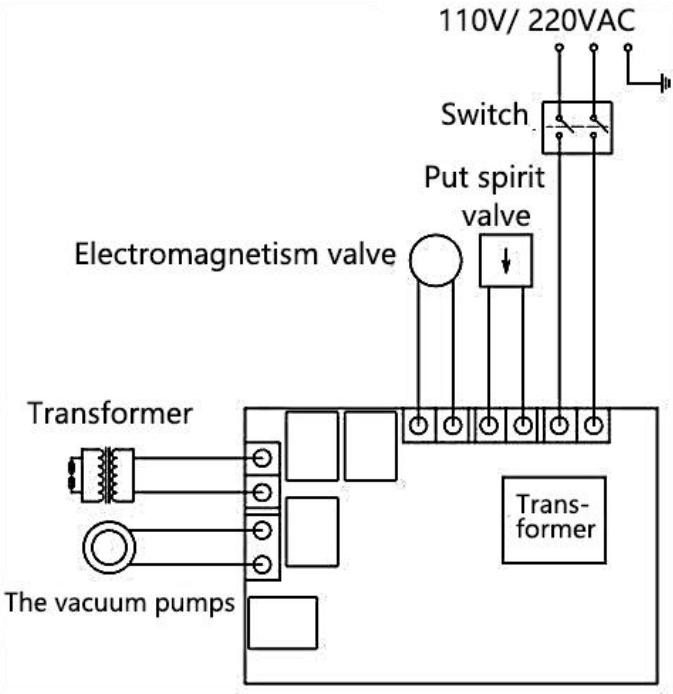

MAINTENANCE

1. After using , the surface of the machine should be cleaned and residual materials inside the machine should be removed.
2. When storing, keep in a clean, dry, and safe location away from children.
3. All maintenance, service, and repairs not discussed in the manual should only be performed by qualified service technicians.

Replace the high temperature cloth(Teflon Cloth)

1. Remove the screws on both sides of the tray, and then pick up the whole tray.

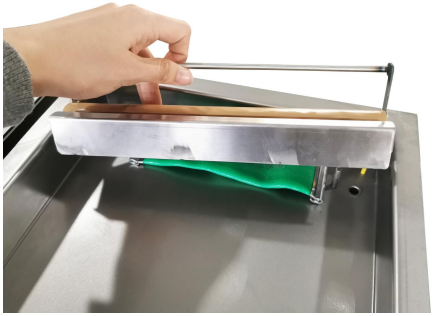

2. Remove the upper screws .

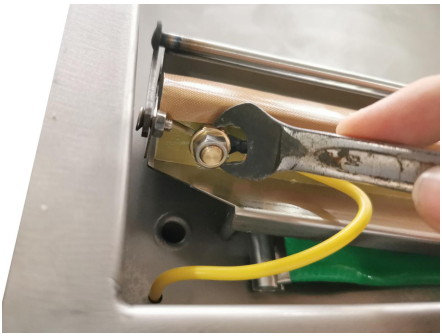

3. Remove the old high-temperature cloth.

4.Apply new high temperature cloth.

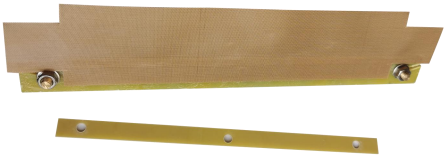

5.Reinstall the original screws

6.Completing the Installation.

Replace the Chamber Sealing Strip

1. Remove the Chamber Sealing Strip. 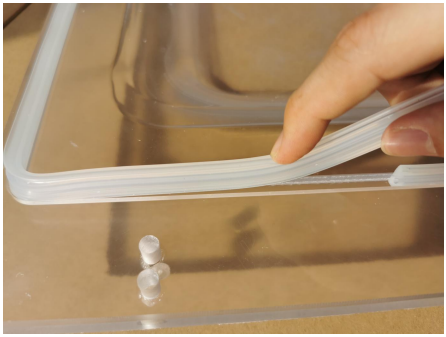	2.Replace the Chamber Sealing Strip with a new one 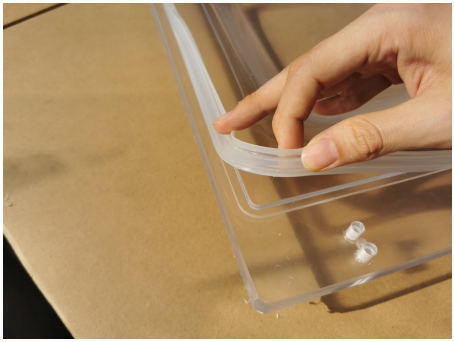
3.Completing the Installation 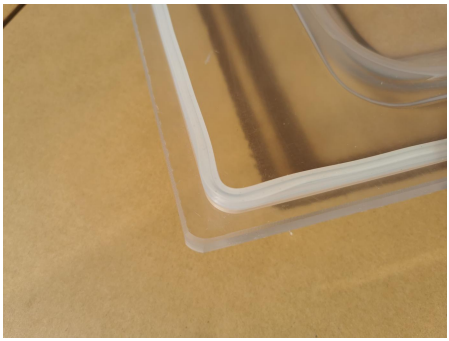	

If the fuse is damaged, replace it as shown

1.Find the power outlet on the back 	2.Take out slot
3.The fuse is in the groove of the card slot 	4. Take out a fuse 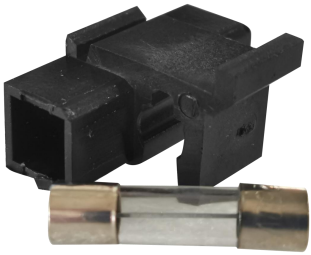

TROUBLESHOOTING AND SOLUTIONS

Problem	Possible Cause	Solution
The machine doesn't work and the control panel shows nothing.	1.No connection of the power supply. 2.The contact of the power switch looses.	1.Check whether the plug and socket are effectively connected. 2.Check whether the wiring of the power input part inside the machine is loose or detached.
The control panel startup,but the machine doesn't work.	The parameter is being set.	Complete the parameter setting.
The best vacuum state can’t be achieved.The vacuumizing speed is slow.	1.Short vacuumizing time. 2.The oil in the vacuum pump is not enough or the oil is not clean. 3.Air leakage and wear of the sealing ring.	1.Extend the vacuum time. 2.Check the oil level, refuel or change the oil (pay attention to the oil type (vacuum oil 46#,68#) and oil quantity. 3.Replace the sealing ring.
Sealing failure or poor sealing.	1.The bags are not correctly placed on the heating plates. 2.Too long/short sealing time. 3.Inappropriate heating temperature.. 4.Silicon strip damaged or with impurity. 5.Damage of electric heating wire.	1.Place the bags on the plate in order. 2.Shorten/prolong the sealing time. 3.Choose proper temperature. 4.Clean or replace the silicon rubber. 5.Change electric heating wire.

CORRECT DISPOSAL

This product is subject to the provision of European Directive 2012/19/EC. The symbol showing a wheelie bin crossed through indicates that the product requires separate refuse collection in the European Union. This applies to the product and all accessories marked with this symbol. Products marked as such may not be discarded with normal domestic waste, but must be taken to a collection point for recycling electrical and electronic devices

Manufacturer: Shanghaimuxinmuyeyouxiangongsi
Address: Baoshanqu Shuangchenglu 803long 11hao 1602A-1609shi Shanghai

EC REP: SHUNSHUN GmbH.
Römeräcker 9 Z2021,76351 Linkenheim-Hochstetten, Germany
Tel: +49 1727041930 euvertreter@gmail.com

UK REP: Pooledas Group Ltd.
Unit 5 Albert Edward House, The Pavilions Preston, United Kingdom
Tel: 01772418127 pooledas123@gmail.com

Imported to AUS: SIHAO PTY LTD.
1 ROKEVA STREETEASTWOOD NSW 2122 Australia

Imported to USA: Sanven Technology Ltd.
Suite 250, 9166 Anaheim Place, Rancho Cucamonga, CA 91730

Made In China

VEVOR®

TOUGH TOOLS, HALF PRICE

Technical Support and E-Warranty Certificate

www.vevor.com/support